PRODUCED BY AN AUTODESK EDUCATIONAL PRODUCT

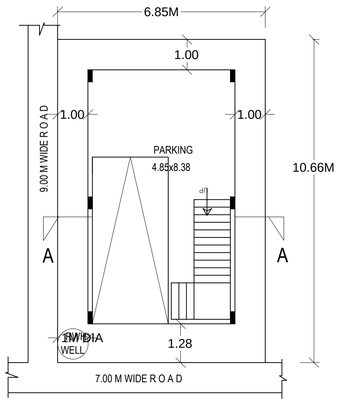

STILT FLOOR PLAN

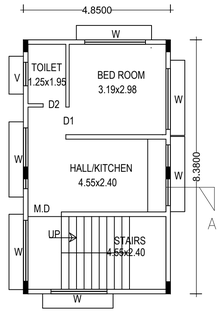

GROUND FLOOR PLAN

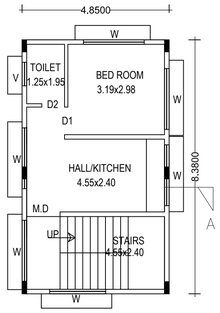

FIRST FLOOR PLAN

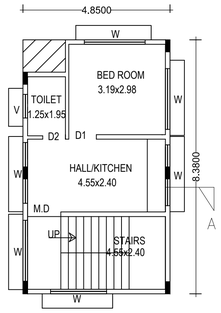

SECOND FLOOR PLAN

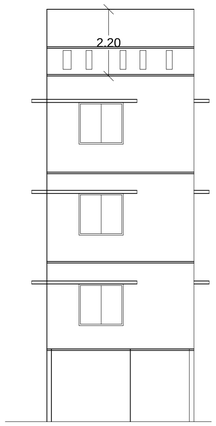

FRONT ELEVATION

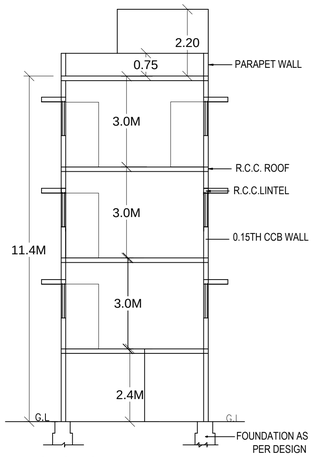

SECTION AT 'AA'

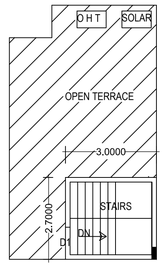

TERRACE FLOOR PLAN

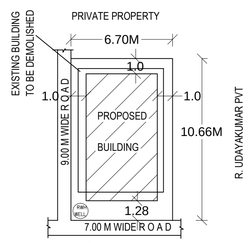

SITE PLAN

Approval Condition :

This Plan Sanction is issued subject to the following conditions :

1.The sanction is accorded for.
a).Consisting of 'Block - A (R3) Wing - A-1 (R3) Consisting of STILT, GF+2UF".
2.The sanction is accorded for Plotted Resi development A (R3) only. The use of the building shall not deviate to any other use.
3.Car Parking reserved in the plan should not be converted for any other purpose.
4.Development charges towards increasing the capacity of water supply, sanitary and power main has to be paid to BWSSB and BESCOM if any.
5.Necessary ducts for running telephone cables, cubicles at ground level for postal services & space for dumping garbage within the premises shall be provided.
6.The applicant shall construct temporary toilets for the use of construction workers and it should be demolished after the construction.
7.The applicant shall INSURE all workmen involved in the construction work against any accident / untoward incidents arising during the time of construction.
8.The applicant shall not stock any building materials / debris on footpath or on roads or on drains. The debris shall be removed and transported to near by dumping yard.
9.The applicant / builder is prohibited from selling the setback area / open spaces and the common facility areas, which shall be accessible to all the tenants and occupants.
10.The applicant shall provide a space for locating the distribution transformers & associated equipment as per K.E.R.C (Es& D) code leaving 3.00 mts. from the building within the premises.
11.The applicant shall provide a separate room preferably 4.50 x 3.65 m in the basement for installation of telecom equipment and also to make provisions for telecom services as per Bye-law No. 25.

12.The applicant shall maintain during construction such barricading as considered necessary to prevent dust, debris & other materials endangering the safety of people / structures etc. in & around the site.
13.Permission shall be obtained from forest department for cutting trees before the commencement of the work.
14.License and approved plans shall be posted in a conspicuous place of the licensed premises. The building license and the copies of sanctioned plans with specifications shall be mounted on a frame and displayed and they shall be made available during inspections.
15.If any owner / builder contravenes the provisions of Building Bye-laws and rules in force, the Architect / Engineer / Supervisor will be informed by the Authority in the first instance, warned in the second instance and cancel the registration if the same is repeated for the third time.
16.Technical personnel, applicant or owner as the case may be shall strictly adhere to the duties and responsibilities specified in Schedule - IV (Bye-law No. 3.6) under sub section IV-8 (e) to (k).
17.The building shall be constructed under the supervision of a registered structural engineer.
18.On completion of foundation or footings before erection of walls on the foundation and in the case of columnar structure before erecting the columns "COMMENCEMENT CERTIFICATE" shall be obtained.
19.Construction or reconstruction of the building should be completed before the expiry of five years from the date of issue of license & within one month after its completion shall apply for permission to occupy the building.
20.The building should not be occupied without obtaining "OCCUPANCY CERTIFICATE" from the competent authority.
21.Drinking water supplied by BWSSB should not be used for the construction activity of the building.
22.The applicant shall ensure that the Rain Water Harvesting Structures are provided & maintained in good repair for storage of water for non potable purposes or recharge of ground water at all times having a minimum total capacity mentioned in the Bye-law 32(a).
23.The building shall be designed and constructed adopting the norms prescribed in National Building Code and in the "Criteria for earthquake resistant design of structures" bearing No. IS 1893-2002 published by the Bureau of Indian Standards making the building resistant to earthquake.
24.The applicant should provide solar water heaters as per table 17 of Bye-law No. 29 for the building.
25.Facilities for physically handicapped persons prescribed in schedule XI (Bye laws - 31) of Building bye-laws 2003 shall be ensured.
26.The applicant shall provide at least one common toilet in the ground floor for the use of the visitors / servants / drivers and security men and also entrance shall be approached through a ramp for the Physically Handicapped persons together with the stepped entry.
27.The Occupancy Certificate will be considered only after ensuring that the provisions of conditions vide Sl. No. 23, 24, 25 & 26 are provided in the building.
28.The applicant shall ensure that no inconvenience is caused to the neighbors in the vicinity of construction and that the construction activities shall stop before 10.00 PM and shall not resume the work earlier than 7.00 AM to avoid hindrance during late hours and early morning hours.

29.Garbage originating from Apartments / Commercial buildings shall be segregated into organic and inorganic waste and should be processed in the Recycling processing unit ------ k.g capacity installed at site for its re-use / disposal (Applicable for Residential units of 20 and above and 2000 Sqm and above built up area for Commercial building).
30.The structures with basement/s shall be designed for structural stability and safety to ensure for soil stabilization during the course of excavation for basement/s with safe design for retaining walls and super structure for the safety of the structure as well as neighboring property, public roads and footpaths, and besides ensuring safety of workman and general public by erecting safe barricades.
31.Sufficient two wheeler parking shall be provided as per requirement.
32.Traffic Management Plan shall be obtained from Traffic Management Consultant for all high rise structures which shall be got approved from the Competent Authority if necessary.
33.The Owner / Association of high-rise building shall obtain clearance certificate from Karnataka Fire and Emergency Department every Two years with due inspection by the department regarding working condition of Fire Safety Measures installed. The certificate should be produced to the Corporation and shall get the renewal of the permission issued once in Two years.
34.The Owner / Association of high-rise building shall get the building inspected by empaneled agencies of the Karnataka Fire and Emergency Department to ensure that the equipment's installed are in good and workable condition, and an affidavit to that effect shall be submitted to the Corporation and Fire Force Department every year.
35. The Owner / Association of high-rise building shall obtain clearance certificate from the Electrical Inspectorate every Two years with due inspection by the Department regarding working condition of Electrical installation / Lifts etc., The certificate should be produced to the BBMP and shall get the renewal of the permission issued that once in Two years.
36.The Owner / Association of the high-rise building shall conduct two mock - trials in the building , one before the onset of summer and another during the summer and assure complete safety in respect of fire hazards.
37.The Builder / Contractor / Professional responsible for supervision of work shall not shall not materially and structurally deviate the construction from the sanctioned plan, without previous approval of the authority. They shall explain to the owner s about the risk involved in contravention of the provisions of the Act, Rules, Bye-laws, Zoning Regulations, Standing Orders and Policy Orders of the BBMP.
38.The construction or reconstruction of a building shall be commenced within a period of two (2) years from date of issue of licence. Before the expiry of two years, the Owner / Developer shall give intimation to BBMP (Sanctioning Authority) of the intention to start work in the form prescribed in Schedule VI. Further, the Owner / Developer shall give intimation on completion of the foundation or footing of walls / columns of the foundation. Otherwise the plan sanction deemed cancelled.
39.In case of Development plan, Parks and Open Spaces area and Surface Parking area shall be earmarked and reserved as per Development Plan issued by the Bangalore Development Authority.
40.All other conditions and conditions mentioned in the work order issued by the Bangalore Development Authority while approving the Development Plan for the project should be strictly adhered to
41.The Applicant / Owner / Developer shall abide by the collection of solid waste and its segregation as per solid waste management bye-law 2016.
42.The applicant/owner/developer shall abide by sustainable construction and demolition waste management as per solid waste management bye-law 2016.
43.The Applicant / Owners / Developers shall make necessary provision to charge electrical vehicles.
44.The Applicant / Owner / Developer shall plant one tree for a) sites measuring 180 Sqm up to 240 Sqm b) minimum of two trees for sites measuring with more than 240 Sqm. c) One tree for every 240 Sq.m of the FAR area as part thereof in case of Apartment / group housing / multi-dwelling unit/development plan.
45.In case of any false information, misrepresentation of facts, or pending court cases, the plan sanction is deemed cancelled.
46.Also see, building licence for special conditions, if any.
Special Condition as per Labour Department of Government of Karnataka vide ADDENDUM (Hosadaagi Hoodike) Letter No. LD/95/LET/2013, dated: 01-04-2013 :

1.Registration of
Applicant / Builder / Owner / Contractor and the construction workers working in the construction site with the "Karnataka Building and Other Construction workers Welfare Board"should be strictly adhered to

2.The Applicant / Builder / Owner / Contractor should submit the Registration of establishment and list of construction workers engaged at the time of issue of Commencement Certificate. A copy of the same shall also be submitted to the concerned local Engineer in order to inspect the establishment and ensure the registration of establishment and workers working at construction site or work place.
3.The Applicant / Builder / Owner / Contractor shall also inform the changes if any of the list of workers engaged by him.
4.At any point of time No Applicant / Builder / Owner / Contractor shall engage a construction worker in his site or work place who is not registered with the "Karnataka Building and Other Construction workers Welfare Board".

Note :

1.Accommodation shall be provided for setting up of schools for imparting education to the children o f construction workers in the labour camps / construction sites.
2.List of children of workers shall be furnished by the builder / contractor to the Labour Department which is mandatory.
3.Employment of child labour in the construction activities strictly prohibited.
4.Obtaining NOC from the Labour Department before commencing the construction work is a must.
5.BBMP will not be responsible for any dispute that may arise in respect of property in question.
6.In case if the documents submitted in respect of property in question is found to be false or fabricated, the plan sanctioned stands cancelled automatically and legal action will be initiated.
.

N
SCALE : 1:100

Color Notes

COLOR INDEX
PLOT BOUNDARY
ABUTTING ROAD
PROPOSED WORK (COVERAGE AREA)
EXISTING (To be retained)
EXISTING (To be demolished)

AREA STATEMENT (BBMP)	VERSION NO.: 1.0.16	
	VERSION DATE: 10/11/2020	
PROJECT DETAIL:		
Authority: BBMP	Plot Use: Residential	
Inward_No: BBMP/Ad.Com./EST/0710/20-21	Plot SubUse: Plotted Resi development	
Application Type: Suvarna Parvangi	Land Use Zone: Residential (Main)	
Proposal Type: Building Permission	Plot/Sub Plot No.: 1/1-A	
Nature of Sanction: NEW	Khata No. (As per Khata Extract): 88-265-1/1-A	
Location: RING-II	Locality / Street of the property: 7TH A MAIN ROAD, SRI CHOWDESHWARI LAYOUT, BANASAWADI	
Building Line Specified as per Z.R: NA		
Zone: East		
Ward: Ward-027		
Planning District: 217-Kammanahalli		
AREA DETAILS:		SQ.MT.
AREA OF PLOT (Minimum)	(A)	73.02
NET AREA OF PLOT	(A-Deductions)	73.02
COVERAGE CHECK		
Permissible Coverage area (75.00 %)		54.77
Proposed Coverage Area (55.66 %)		40.64
Achieved Net coverage area (55.66 %)		40.64
Balance coverage area left (19.35 %)		14.13
FAR CHECK		
Permissible F.A.R. as per zoning regulation 2015 (1.75)		127.79
Additional F.A.R within Ring I and II (for amalgamated plot -)		0.00
Allowable TDR Area (60% of Perm.FAR)		0.00
Premium FAR for Plot within Impact Zone (-)		0.00
Total Perm. FAR area (1.75)		127.79
Residential FAR (95.53%)		120.43
Proposed FAR Area		126.07
Achieved Net FAR Area (1.73)		126.07
Balance FAR Area (0.02)		1.72
BUILT UP AREA CHECK		
Proposed BuiltUp Area		169.17
Achieved BuiltUp Area		169.17

Approval Date : 12/02/2020 2:48:09 PM

Payment Details

Sr No.	Challan Number	Receipt Number	Amount (INR)	Payment Mode	Transaction Number	Payment Date	Remark
1	BBMP/18271/CH/20-21	BBMP/18271/CH/20-21	766.9	Online	11578563291	11/10/2020 8:50:02 PM	-

No.	Head	Amount (INR)	Remark
1	Scrutiny Fee	766.9	-

Block :A (R3)

Floor Name	Total Built Up Area (Sq.mt.)	Deductions (Area in Sq.mt.)		Proposed FAR Area (Sq.mt.)	Total FAR Area (Sq.mt.)	Tnmt (No.)
		StairCase	Parking	Resi.		
Terrace Floor	8.10	8.10	0.00	0.00	0.00	00
Second Floor	39.15	0.00	0.00	39.15	39.15	01
First Floor	40.64	0.00	0.00	40.64	40.64	01
Ground Floor	40.64	0.00	0.00	40.64	40.64	01
Stilt Floor	40.64	0.00	35.00	0.00	5.64	00
Total:	169.17	8.10	35.00	120.43	126.07	03
Total Number of Same Blocks :	1					
Total:	169.17	8.10	35.00	120.43	126.07	03

FAR &Tenement Details

Block	No. of Same Bldg	Total Built Up Area (Sq.mt.)	Deductions (Area in Sq.mt.)		Proposed FAR Area (Sq.mt.)	Total FAR Area (Sq.mt.)	Tnmt (No.)
			StairCase	Parking	Resi.		
A (R3)	1	169.17	8.10	35.00	120.43	126.07	03
Grand Total:	1	169.17	8.10	35.00	120.43	126.07	3.00

Parking Check (Table 7b)

Vehicle Type	Reqd.		Achieved	
	No.	Area (Sq.mt.)	No.	Area (Sq.mt.)
Car	-	-	1	13.75
Total Car	-	-	1	13.75
TwoWheeler	-	-	4	10.00
Other Parking	-	-	-	11.25
Total		0.00		35.00

UnitBUA Table for Block :A (R3)

FLOOR	Name	UnitBUA Type	UnitBUA Area	Carpet Area	No. of Rooms	No. of Tenement
GROUND FLOOR PLAN	SPLIT R1	FLAT	40.64	40.64	3	1
FIRST FLOOR PLAN	SPLIT R2	FLAT	40.64	40.64	3	1
SECOND FLOOR PLAN	SPLIT R3	FLAT	39.15	39.15	3	1
Total:	-	-	120.43	120.43	9	3

Block USE/SUBUSE Details

Block Name	Block Use	Block SubUse	Block Structure	Block Land Use Category
A (R3)	Residential	Plotted Resi development	Bldg upto 11.5 mt. Ht.	R

Required Parking(Table 7a)

Block Name	Type	SubUse	Area (Sq.mt.)	Units		Car		
				Reqd.	Prop.	Reqd./Unit	Reqd.	Prop.
	Total :		-	-	-	-	0	1

SCHEDULE OF JOINERY:

BLOCK NAME	NAME	LENGTH	HEIGHT	NOS
A (R3)	D2	0.75	2.10	03
A (R3)	D1	0.91	2.10	03
A (R3)	M.D	1.10	2.10	03

SCHEDULE OF JOINERY:

BLOCK NAME	NAME	LENGTH	HEIGHT	NOS
A (R3)	V	1.00	0.60	06
A (R3)	W	2.20	1.20	21

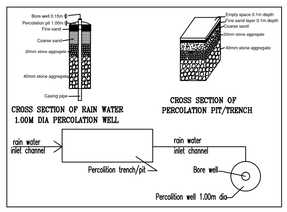

DETAILS OF RAIN WATER HARVESTING STRUCTURES

The plans are approved in accordance with the acceptance for approval by the Assistant Director of town planning (EAST) on date: 02/12/2020 vide lp number: BBMP/AD.COM./EST/0710/20-21 subject to terms and conditions laid down along with this building plan approval.

Validity of this approval is two years from the date of issue.

Name : LAKSHMANA
Designation : Assistant Director Town Planning (ADTP)
Organization : BRUHAT BANGALORE MAHANAGARA PALIKE
Date : 23-Dec-2020 17: 03:39

ASSISTANT DIRECTOR OF TOWN PLANNING (EAST)

BHRUHAT BENGALURU MAHANAGARA PALIKE

OWNER / GPA HOLDER'S SIGNATURE

OWNER'S ADDRESS WITH ID NUMBER & CONTACT NUMBER :
S.SATHISH KUMAR AND S. SHIVA KUMAR NO-1/1-A, 7TH A MAIN ROAD, SRI CHOWDESHWARI LAYOUT BANASAWADI

ARCHITECT/ENGINEER /SUPERVISOR 'S SIGNATURE
R. Vasanth Madhava No 29, 2nd main road, Tata Silk Fsim, Basavanagudi /nNo 29, 2nd main road, Tata Silk Fsim , Basavanagudi -3.6/E:3213:08-09

PROJECT TITLE :
PROJECT DETAILS

DRAWING TITLE : 813151398-10-11-2020 02-40-26$_$6-8M-10M-SGFS-2U-MADAM :: A (R3) with STILT, GF+2UF

SHEET NO : 1

PRODUCED BY AN AUTODESK EDUCATIONAL PRODUCT
PRODUCED BY AN AUTODESK EDUCATIONAL PRODUCT
PRODUCED BY AN AUTODESK EDUCATIONAL PRODUCT